HENSEL PERFORMING LIGHT VISIT INDUSTRIAL LIGHT

Flash Generator
Nova D 1200/D 2400
Nova DL 1200/DL 2400

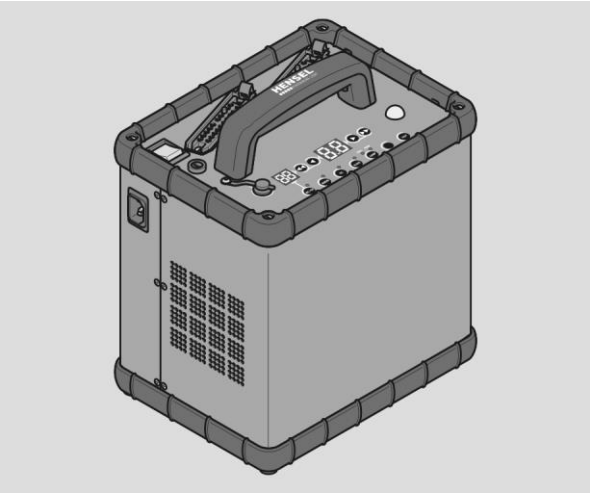

User manual

Translation of the original German User Manual Doc. No.: 900.0506.01

Version: 09/2025

Contents

Information about this manual and about the manufacturer 6
Keeping this manual on hand 6
Design features in the text 6
Design features in the figures 7
Copyright 8
Manufacturer's address 8

Safety 9
Intended use 9
Fundamental safety information 9
Prevention of equipment damage and malfunctions 11
Design features of warning notices 13
Design features of equipment or property damage information 13

Description 14
Overview of scope of delivery 14
Device Overview 15
Overview of the Nova D 1200/2400 User Panel 16
Overview of the Nova DL 1200/2400 User Panel 18
Task and function 20
Type plate 21
Technical data 22

Unpacking the device and checking the scope of delivery 24

Commissioning the device 25

Mounting and removing components of the device 26
Connecting and disconnecting the flash head cable 26
Connecting and disconnecting the mains cable 28
Hanging the device into the stand with an optional holder 29

Operating the device 30
Activating and deactivating the device 30

Trigging a test flash 30
Activating and deactivating the model light 31
Activating and deactivating automatic model light reduction (“Autored”) 31
Setting the flash energy 32
Activating and deactivating the “Flash Check” function 38
Activating and deactivating the “Audio” function 39
Synchronizing the device with the camera 39
Daily flash counter 42
Wi-Fi settings 43

Error messages 50

Transporting and storing the device 54

Servicing the device 55
Caring for and cleaning the device 55
Replacing a defective fuse 56

Performing firmware updates 57

Disposing of the device and packaging 58
In Germany 58
Outside of Germany 58

EU Declaration of Conformity 59

Accessories 60
Flash heads 60
Radio remote trigger 60
Additional accessories 60

Warranty provisions 61
In Germany 61
Outside of Germany 61

Limitation of liability 62

Returning a product to Customer Service 63

Information about this manual and about the manufacturer

This manual will help you safely use the Nova D 1200/2400 and Nova DL 1200/2400 flash generators. The Nova D 1200/2400 and Nova DL 1200/2400 flash generators are hereinafter referred to as "device" for short.

Keeping this manual on hand

This manual is part of the device.

- ➢ Always keep this manual together with the device.
- ➢ Provide this manual when selling the device or passing it on in another manner.

Design features in the text

Various elements of this manual are provided with specific design features. This allows you to easily differentiate between the following elements:

Normal text

- ➢ Action
- • Bullet points

CONTROLS

Cross-references (see page)

ⓘ Tips contain additional information, e.g. special information on the device.

Design features in the figures

If elements are referred to in a key or in the body text, they are provided with a number (1).

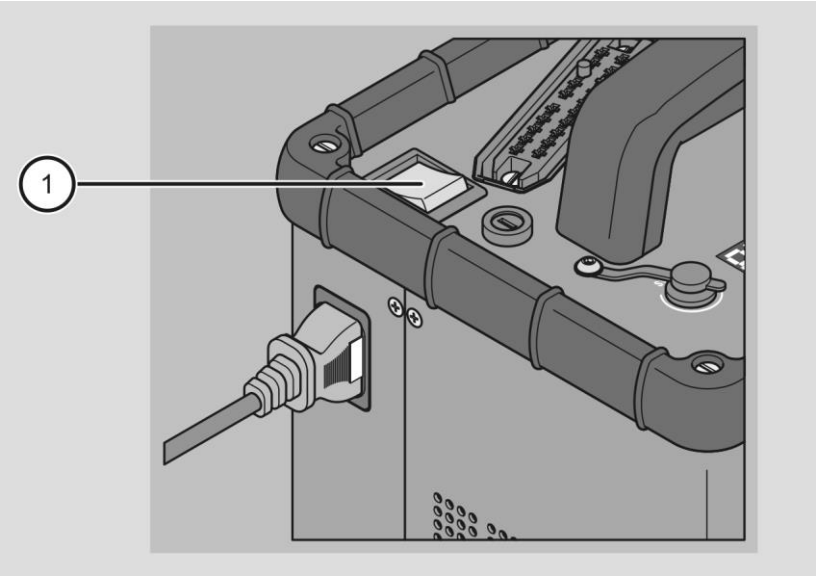

Copyright

This manual contains information that is subject to copyright. Without the prior written permission of Hensel-Visit GmbH & Co. KG, this manual shall not be copied, printed, filmed, processed, reproduced or distributed in any form, in full or in excerpts.

©Hensel-Visit GmbH & Co. KG
All rights reserved.

Manufacturer's address

Hensel-Visit GmbH & Co. KG
Robert-Bunsen-Str. 3
97076 Würzburg
Phone: +49-931-27881-0
Fax: +49-931-27881-50
E-mail: info@hensel.de
URL: www.hensel.de

Safety

The device has been built according to state-of-the-art technology and recognized safety-related regulations. During work with and on the device, however, residual risk remains, which could present a danger to life and limb. For this reason, the following safety information is to be observed and followed.

Intended use

The device is used to provide the electrical energy for certain indoor flash heads. The device must be used only with the accessories described in these instructions and released by the manufacturer.

Intended use also includes reading and fully understanding this manual, as well as observing and following all information in this manual, especially the safety information. In addition, the safety information and all other information in the instructions for the cameras used, flash heads and radio remote triggers are to be observed. Any other use is expressly considered to be unintended use and will result in the voiding of warranty and liability claims.

Fundamental safety information

Prevention of serious injuries or death from explosions

The device is not explosion-protected. When the flash tube is triggered, sparks might arise, which could lead to an explosion. Serious injury or death can result.

- Do not use the device in explosive atmospheres.

Prevention of serious injuries or death from electric shock

Improper work on the device can lead to an electric shock.

- Only connect the device to a power mains with an intact protective contactor.
- Only use plugs with contacts in perfect condition.
- Protect the device from moisture.
- Never use a wet device.
- Do not open the housing.

- Where possible, avoid laying the cable on the ground. If laying on the ground cannot be avoided, make sure the cables are not damaged by vehicles or ladders.
- Check the device annually for operating safety (see the maintenance schedule on page 55).
- Regularly clean the outside of the device with a dry cloth.
- Have damaged cables and the device replaced immediately by the authorized Customer Service only.

Electrical shock due to incorrect handling with defective flash tubes and device

In the case of a defective flash tube, the electrodes could be exposed. Touching the flash tube may result in an electric shock.

- In case of a damaged flash tube, switch off the device immediately and disconnect it from the power mains.
- Disconnect the connection between the flash head and the device.
- Always hereby observe the user manual for the flash head which is utilized.

Prevention of serious injuries due to fire

When the flash tube is triggered, sparks might arise, which could lead to fire. Serious injuries can result.

- Do not use the device in the vicinity of flammable materials such as decorative materials, paper, etc.
- Do not store flammable materials such as decorative materials, paper, etc. in the vicinity of the device.

Prevention of serious skin and eye injuries

Triggering a flash in the direct vicinity of the eyes can result in skin and eye injuries.

- Observe the required minimum distance for the type of light shaping tool and flash intensity.
- Do not look into the light shaping tool in case the flash is triggered accidentally.
- In case of skin or eye injuries, consult a doctor immediately.

Prevention of ozone formation

When using the device in enclosed spaces, ozone can form.

- To prevent an increased ozone concentration, vent enclosed spaces regularly.

Prevention of equipment damage and malfunctions

Prevention of equipment damage due to fogging

Fogging can occur due to a sudden temperature change, e.g. in a new environment.

- Always let the device acclimatize before use in a new environment.

Prevention of equipment damage due to rain, vapors, frost, heat, humidity and dust

Rain, vapors, frost, heat, humidity and dust can damage the device.

- Protect the device against dripping and spraying water (e.g. rain) or vapors.
- Protect the device against frost, heat and high humidity.
- Do not place containers of liquids on the device.
- Make sure that neither the device nor its components are standing or lying on wet ground.
- Do not store the device in locations exposed to heat or moisture.
- Cover the device with suitable dust protection when it is not in operation.

Prevention of equipment damage when using external products

The use of the device in combination with external products can lead to equipment damage.

- Use the device only with accessories and original spare parts recommended by the manufacturer.

Malfunctions due to electromagnetic radio signals

The device transmits and receives electromagnetic radiation in a frequency range from 2.3995 to 2.4745 GHz according to IEEE 802.11 n. The maximum transmission power is 100 mW. The power, range and reliability can be impaired by other radio systems or the device can cause interference in other radio systems, such as radio telephones (cell phones,

cordless telephones), Wi-Fi routers, radio and TV stations or medical devices.

- Before using the device in sensitive environments, such as hospitals, make sure that use is permitted there.

Design features of warning notices

This user manual contains the following safety information:

⚠ WARNING	
⚠	Messages with the word WARNING warn about a dangerous situation that could lead to death or serious injuries.

Design features of equipment or property damage information

IMPORTANT!	
	This information warns against a situation that can lead to equipment or property damage.

Description

Overview of scope of delivery

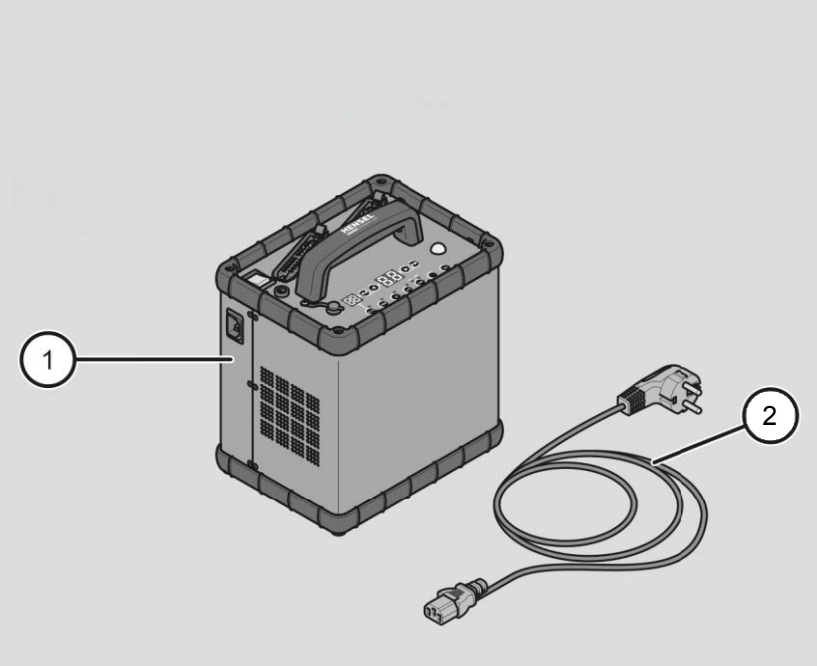

No.	Designation
1	Device
2	Mains cable (country-specific, shown as an example)

Device Overview

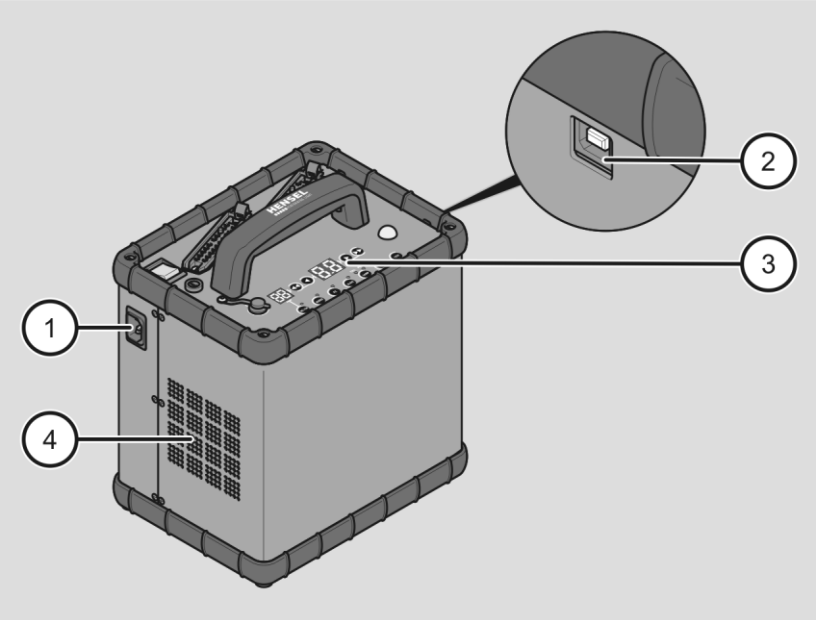

No.	Designation
1	Mains socket
2	USB port
3	User panel
4	Fan

The USB port is currently used only for servicing purposes.

Overview of the Nova D 1200/2400 User Panel

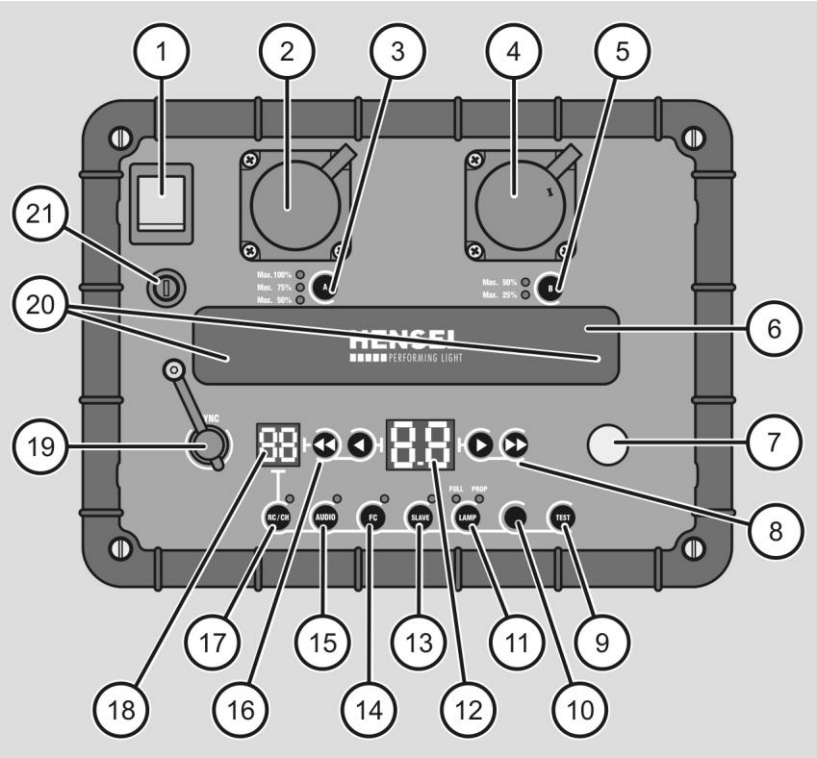

No.	Designation
1	Main switch
2	Connection socket for the flash head cable (13-pin round plug)
3	Activation and deactivation of Channel A
4	Connection socket for the flash head cable (13-pin round plug)
5	Activation and deactivation of Channel B
6	Handle with radio antenna
7	Photo cell

No.	Designation
8	Arrow keys for energy boosting in 1/10 and/or 1 aperture increments, Wi-Fi settings, setting the switchover time for the economy mode (Autored), switching over the channel
9	TEST: Manual triggering of flash
10	“Ready” LED display for flash readiness
11	LAMP: Activation and deactivation of the model light in “Prop” and “Full” modes
12	Display for the indication of flash energy, flash counter and Wi-Fi settings
13	SLAVE: Activation and deactivation of the photo cell
14	FC: Activation and deactivation of “Flash Check”
15	AUDIO: Activation and deactivation of the signal tone for flash readiness, error messages, the achievement of the upper and/or lower energy setting limit
16	Arrow keys for energy reduction in 1/10 and/or 1 aperture increments, Wi-Fi settings, setting the switchover time for the economy mode (Autored), switching over the channel
17	RC/CH: Activation and deactivation of the radio receiver, selection of the channel
18	Display for the channel selector
19	Sync socket
20	Storage of the replacement fuses in the handle
21	Fuse 10 AF

Overview of the Nova DL 1200/2400 User Panel

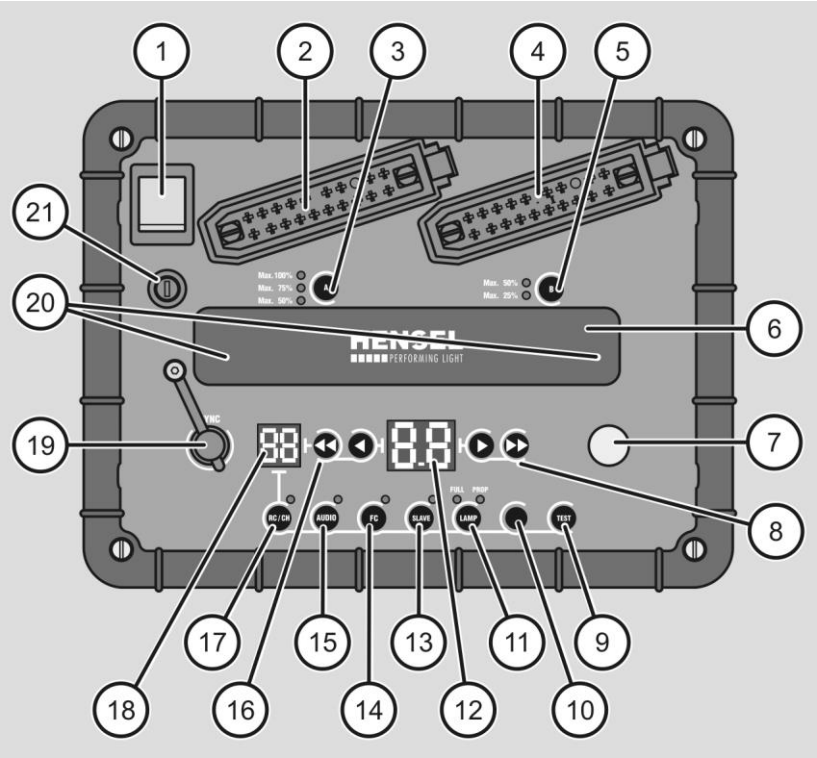

No.	Designation
1	Main switch
2	Connection socket for the flash head cable (20-pin long plug)
3	Activation and deactivation of Channel A
4	Connection socket for the flash head cable (20-pin long plug)
5	Activation and deactivation of Channel B
6	Handle with radio antenna
7	Photo cell

No.	Designation
8	Arrow keys for energy boosting in 1/10 and/or 1 aperture increments, Wi-Fi settings, setting the switchover time for the economy mode (Autored), switching over the channel
9	TEST: Manual triggering of flash
10	“Ready” LED: Display for flash readiness
11	LAMP: Activation and deactivation of the model light in “Prop” and “Full” modes
12	Display for the indication of flash energy, flash counter and Wi-Fi settings
13	SLAVE: Activation and deactivation of the photo cell
14	FC: Activation and deactivation of “Flash Check”
15	AUDIO: Activation and deactivation of the signal tone for flash readiness, error messages, the achievement of the upper and/or lower energy setting limit
16	Arrow keys for energy reduction in 1/10 and/or 1 aperture increments, Wi-Fi settings, setting the switchover time for the economy mode (Autored), switching over the channel
17	RC/CH: Activation and deactivation of the radio receiver, selection of the channel
18	Display for the channel selector
19	Sync socket
20	Storage of the replacement fuses in the handle
21	Fuse 10 AF

ⓘ LED displays are located above and next to the buttons on the user panel. They illuminate when the buttons are activated.

Task and function

The device is used to provide the electrical energy for certain indoor flash heads. The flash head cable is connected to the flash head and device using a 13-pin round plug and/or 20-pin long plug depending on the device design.

The accumulated energy is adjustable in 1/10 increments and can be distributed symmetrically or asymmetrically via the flash head sockets.

Using the optional holder, the device can be hung into the base of one of the flash head tripods. The stand therefore obtains stability due to the low center of gravity. In addition, the device must be protected against any dirt and moisture on the ground.

The device has a bright and proportionally adjustable model light. In addition, the device is equipped with an “Autored” automatic model light economy mode. After a preset time, the energy of the model light is reduced to 9.0 in case of settings above 9.0 when no button has been pressed or when no flash has been emitted on the device.

Synchronization with the camera is executed via a sync cord, the built-in photo cell or the built-in radio receiver. The radio aerials are integrated into the handles of the device.

Using the jack plug, the device is connected to the camera through the sync socket. The flash is triggered through the photo cell by the occurrence of a flash emitted by another device. With the optionally available radio remote trigger, the camera and flash can be synchronized via radio triggering.

The device has an integrated Wi-Fi module. With this module, important functions like flash energy, model light and synchronization can be remote-controlled by a smart device or desktop/laptop computer. When several devices are actuated, they can be controlled individually, in groups or globally in a team. Devices of a team can be controlled centrally by up to two Apps at the same time. A team can comprise up to twelve devices. In parallel with this team, nine additional teams can be set.

Type plate

The type plate is attached to the bottom of the housing. You will find the following information on the type plate:

- Manufacturer name
- Name of the model
- Code number
- CE marking
- Symbol for environmentally sound disposal
- Country of manufacturing

Technical data

Device model	Nova D 1200 Nova DL 1200	Nova D 2400 Nova DL 2400
Article number	Nova D 3612SW Nova DL 361212SW	Nova D 3624SW Nova DL 362412SW
Nominal energy	1200 J	2400 J
Guide number [1]	1 m = 128 0/10 2 m = 64 0/10	1 m = 180 0/10 2 m = 120 0/10
Minimum flash duration [2] 1 EH Mini i Speed 1 EH Mini i	 1/4,500 1/2,800	 1/3,160 1/1,450
Maximum flash duration [2] 1 EH Mini i Speed 1 EH Mini i	 1/1,500 1/880	 1/750 1/440
Maximum recycling time	0.6 s	1.1 s
Minimal recycling time	0.16 s	0.2 s
Energy adjustment and flash energy	8 f-stop	
Energy distribution	Symmetrical or asymmetrical	
Flash outputs	Nova D: Two (13-pin round sockets) Nova DL: Two (20 pin long sockets)	
Weight	7.15 kg	8.5 kg
Overall dimensions (L x W x H in cm)	19.8 × 26.0 × 26.8	19.8 × 26.0 × 30.6
Model light	230 V / 650 W, 115 V / 300 W	
Connectable flash heads	Nova D: EH Mini i, ring flash P/PM-XS 3000, F-Spot 3000 (round plug), LightStick (round plug) and other components (refer to Chapter “Accessories,” Page 60)	
Model light regulation	Off, Full, Proportional, Autored	

Device model	Nova D 1200 Nova DL 1200	Nova D 2400 Nova DL 2400
Sync socket/voltage	6.3 mm jack, mono/5 V DC	
Radio receiver	Strobe Wizard Plus and freemask integrated	
Fuses	10 AF, switch capacity according to EN 60127-2/1 and/or IEC 127-2/1	
Mains connection	Multi-voltage (110–230 V)	
Additional features	Thermal monitoring of the energy electronics, integrated Wi-Fi module	
Daily flash counter	Resettable	
Fan	Built-in	
Photo cell	Switchable	
Flash Check	Switchable	
Model light economy mode	Autored	
Internal power drop in case of energy reduction	APD (automatic power drop)	
Display	7-segment for flash energy, daily flash counter, channel display, “Autored” mode, error	
User interface	Embossed membrane keypad with buttons, fluorescent, Hensel user logic	
Subject to technical change. The specified data constitutes typical values that can be subject to fluctuations due to the tolerances of the components used.		

[1] Measured at 100 ASA, exposure time 1/60 s, 100 % flash energy and 12” reflector at a distance of 1 m and 2 m.

[2] The specification of the flash duration refers to the half-life $t_{0.5}$.

Unpacking the device and checking the scope of delivery

- Remove the product from the packaging.
- Keep the original packaging in case you need to return the product to Customer Service.
- Check the scope of delivery for correctness and completeness (see page 14).
- Make sure all parts are undamaged.
- In case of deviations, contact the manufacturer and/or dealer immediately.

Commissioning the device

To commission the device, proceed as follows:

- Connect the flash head cable to the device (refer to Page 26).
- Connect the other end of flash head cable to the flash head. Always hereby observe the user manual of the flash head.
- Connect the mains cable (refer to Page 28).
- Turn on the device at the main switch (refer to Page 30).
- Trigger a test flash (refer to Page 30).

Mounting and removing components of the device

IMPORTANT!	
	The device can be damaged if external products are used. ➢ Use only original spare parts and accessories from the manufacturer.

Connecting and disconnecting the flash head cable

Flash head cable with 13-pin round plug

To connect the flash head cable to the device with the 13-pin round plug, proceed as follows:

- ➢ Make sure the device is turned off at the main switch (2).
- ➢ Insert the round plug (1) into the connecting socket.
- ➢ Secure the flash head cable with the union nut.
- ➢ In the process, observe the user manual of the corresponding flash head.

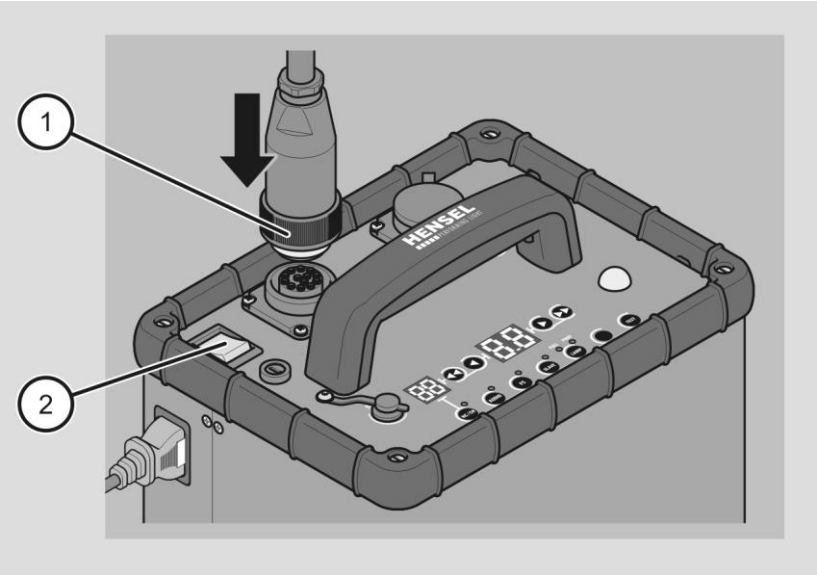

To remove the flash head from the device, proceed as follows:
- ➢ Switch off the device with the main switch (2).
- ➢ Completely undo the screw fitting.
- ➢ Pull the round plug (1) upwards.

Flash head cable with 20-pin long plug

To connect the flash head cable to the device with the 20-pin long plug, proceed as follows:
- ➢ Make sure the device is turned off at the main switch (2).
- ➢ Insert the long plug into the connecting socket.
- ➢ In the process, observe the user manual of the corresponding flash head.

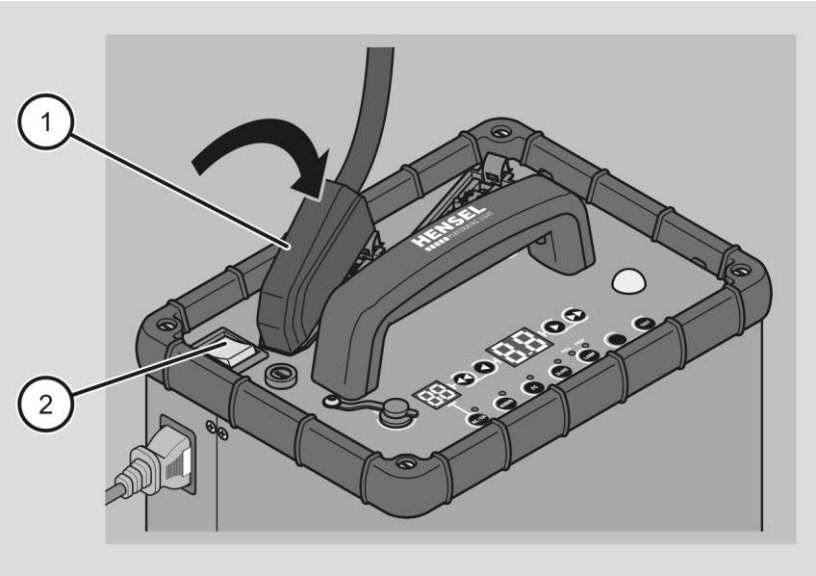

To remove the flash head from the device, proceed as follows:
- ➢ Switch off the device at the main switch (2).
- ➢ Pull the long plug (1) upwards.

ⓘ The flash heads used with the device must be connected using the flash head cable labeled in yellow/red.

Connecting and disconnecting the mains cable

To connect the mains cable, proceed as follows:

- Insert the plug of the mains cable (2) into the mains socket of the device (1).
- Connect the other end of the mains cable (2) to a mains socket.

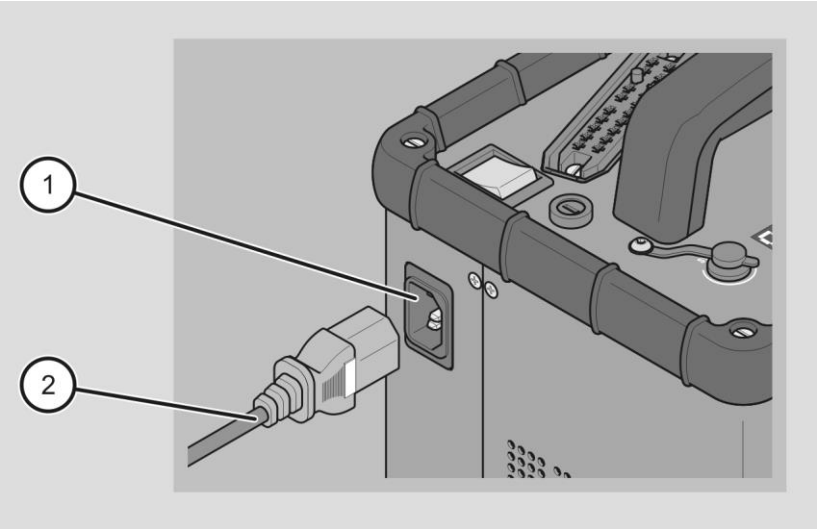

To remove the mains cable from the device, proceed as follows:

- Remove the mains cable from the mains socket.
- Remove the plug of the mains cable (2) from the mains socket of the device (1).

Fuse protection of the mains sockets on the building side

Ue = 230 V	Ue = 115 V
16 A (characteristic curve B)	20 A

Hanging the device into the stand with an optional holder

To hang the device into a stand, proceed as follows:

- Take the device in your hand and guide the lower side of the holder under the handle of the device.
- Hang the device into the base of the standd with the holder (1).
- Make sure the device is firmly hung into place.

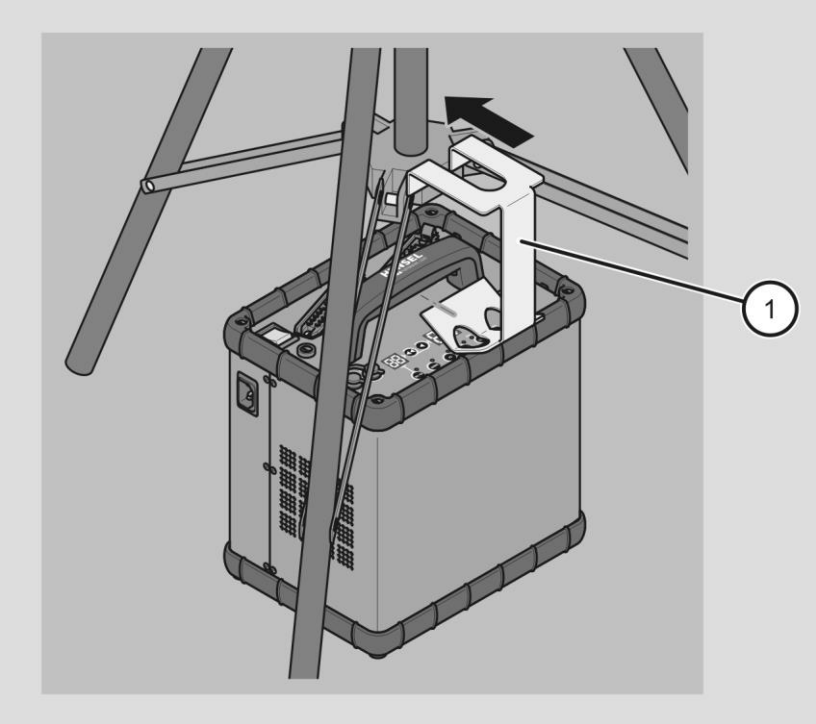

To remove the device from the stand, proceed as follows:

- Remove the device from the stand with the holder.
- Remove the holder (1) from the device.

Operating the device

Activating and deactivating the device

- Make sure the device is connected.
- To switch on the device, set the main switch (1) to the “I” position.
- To switch off the device, set the main switch (1) to the “0” position.

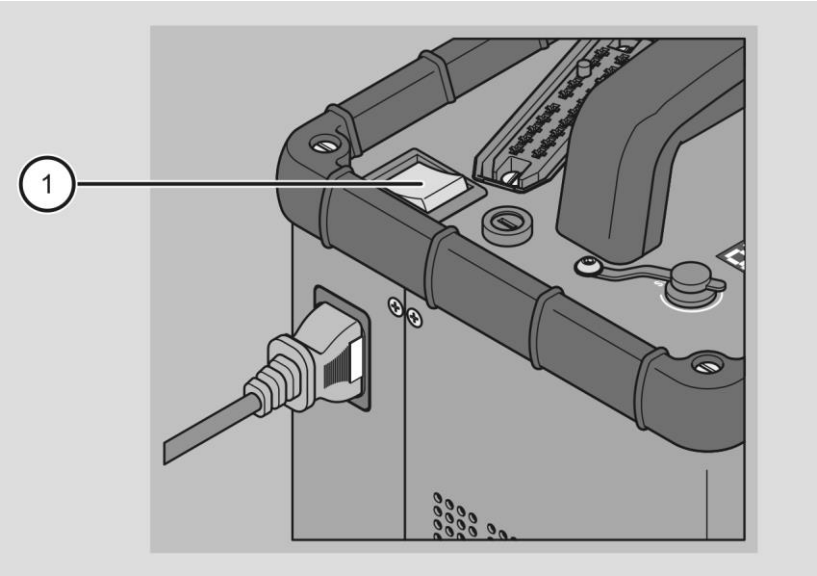

Trigging a test flash

To trigger a test flash, proceed as follows:

- Make sure the “Ready” LED at the left of the TEST button illuminates as green.
- Press the TEST button.

The device releases a flash.

If you keep the TEST button pressed, the device releases a flash in a flash sequence that corresponds with the set flash energy.

Activating and deactivating the model light

“Full” and “Prop” modes

To activate the model light in the “Full” and “Prop” modes, proceed as follows:

- Briefly press the LAMP button. The “Prop” LED display above the LAMP button illuminates as green.

The brightness of the model light is proportional to the set flash energy.

- Press the LAMP button again.

The “Full” LED display above the LAMP button illuminates as green. The model light illuminates at maximum brightness, irrespective of the set flash energy.

To deactivate the model light in the “Full” and “Prop” modes, proceed as follows:

- Press the LAMP button again.

The “Full” and “Prop” LED displays above the LAMP button go out.

Activating and deactivating automatic model light reduction (“Autored”)

The device is equipped with an automatic model light economy mode (“Autored”). After a preset time of 35 minutes, the brightness is dimmed to half (level 9) in “Full” mode. In “Prop” mode, the brightness is reduced to half when the flash energy is set in a range from 9.1 to 10. To activate automatic model light economy mode (“Autored”), proceed as follows:

- Press the arrow buttons (2, 3) at the same time.

The last selected switchover time is shown in minutes on the right display.

- Press the arrow buttons (2, 3) to adjust the time in one-minute increments up to a maximum of 90 minutes.
- Press the arrow buttons (1, 4) to adjust the time in 5-minute increments.

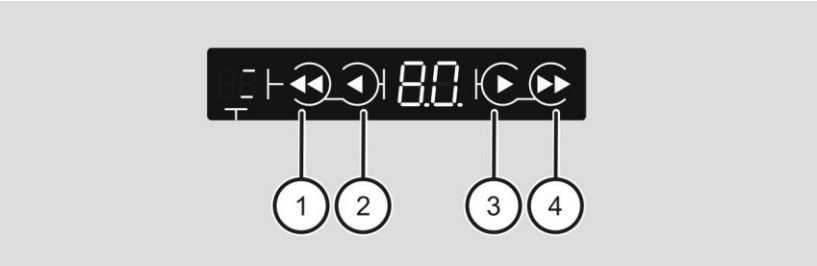

To activate automatic model light economy mode (“Autored”), proceed as follows:

➢ Reduce the value shown on the display using the arrow buttons (1) or (2) until two hyphens “--” appear on the display.

Setting the flash energy

The flash energy can be set in stages over a range of 8 f-stops from 3 (lowest flash energy) to 10 (highest flash energy) using the arrow buttons. The set energy values from 3.0 to 10 are displayed on the right display. The following figure shows an overview of the arrow buttons.

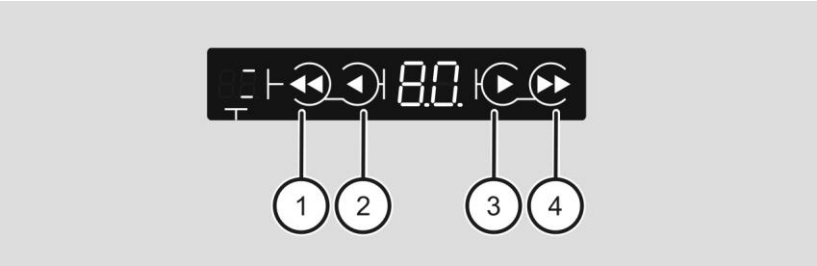

No.	Explanation
1	Reduce the value in increments of whole f-stops
2	Reduce the value in increments of 0.1 f-stops
3	Increase the value in increments of 0.1 f-stops
4	Increase the value in increments of whole f-stops

Adjusting flash energy only on Channel A

To set the flash energy on Channel A, proceed as follows:

➢ To activate Channel A, press the A button (1).

The LED for the maximum energy illuminates as green.

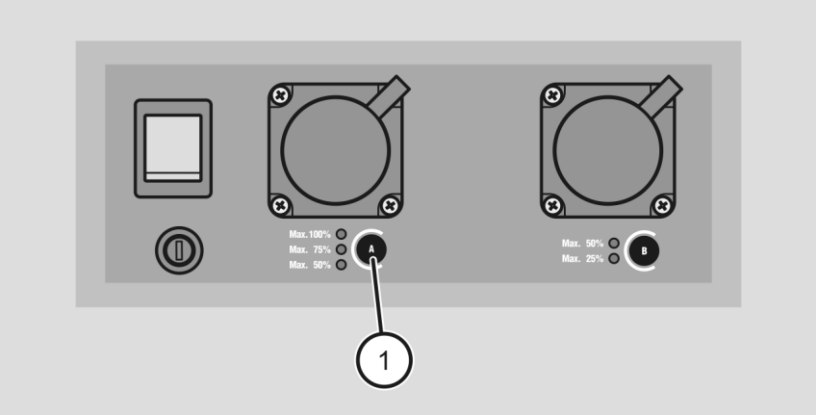

➢ Press the arrow buttons (2, 3) to adjust the energy in 0.1 f-stop increments.

➢ Press the arrow buttons (1, 4) to adjust the energy in whole f-stop increments.

➢ The values to be set can be found in the following table.

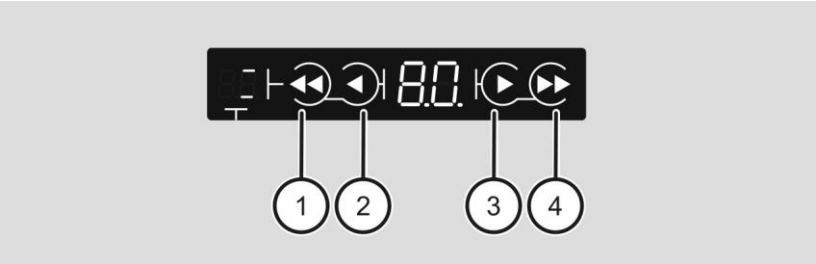

Displayed energy value	Flash energy Nova D 2400/DL 2400	Flash energy Nova D 1200/DL 1200
10	2400 J	1200 J
9.0	1200 J	600 J
8.0	600 J	300 J
7.0	300 J	150 J
6.0	150 J	75 J
5.0	75 J	37.5 J
4.0	37.5 J	19 J
3.0	19 J	8.5 J

➢ To deactivate Channel A, press the A button (1) again.

The corresponding LED next to the A button (1) goes out.

Adjusting flash energy only on Channel B

To set the flash energy on Channel B, proceed as follows:

➢ To activate Channel B, press the B button (1).

The LED for the set maximum energy illuminates green.

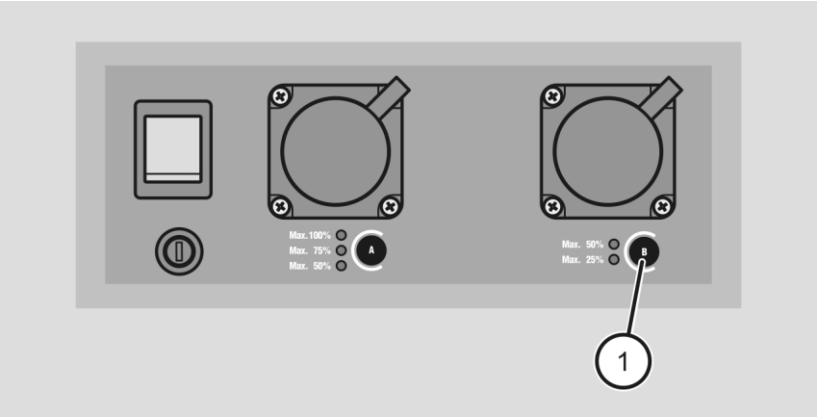

➢ Set the values in an analogous manner to Channel A. The values to be set can be found in the following table.

Displayed energy value	Flash energy Nova D 2400/DL 2400	Flash energy Nova D 1200/DL 1200
9.0	1200 J	600 J
8.0	600 J	300 J
7.0	300 J	150 J
6.0	150 J	75 J
5.0	75 J	37.5 J
4.0	37.5 J	19 J
3.0	19 J	8.5 J

➢ To deactivate Channel B, press the B button (1) again.

The corresponding LED next to the B button (1) goes out.

Setting the flash energy symmetrically

Optionally, the flash energy can be set symmetrically for Channels A and B. To set the flash energy symmetrically for Channels A and B, proceed as follows:

- ➢ To activate Channel A, press the A button (1).
- ➢ To activate Channel B, press the B button (2).

The LEDs for maximum energy light up automatically.

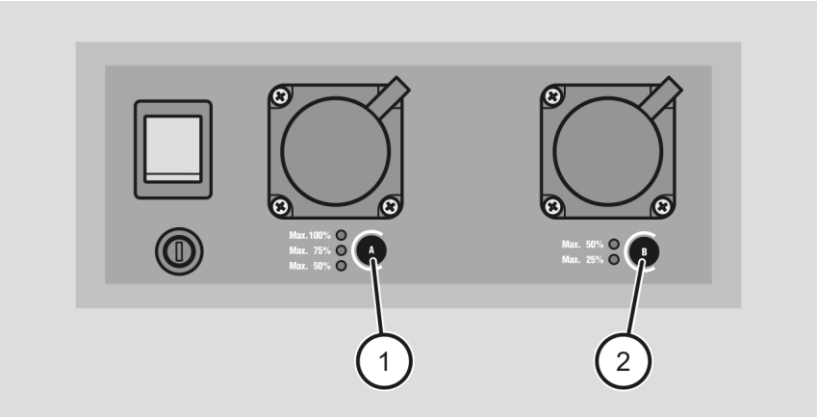

- ➢ Set the same flash energy using the arrow buttons (1, 2, 3, 4). The values to be set symmetrically can be found in the table (refer to Chapter “Setting the flash energy asymmetrically,” Page 37).

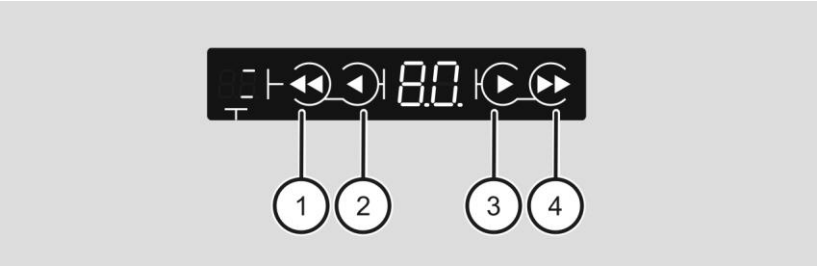

- ➢ To deactivate Channels A and B, press the A (1) and B (2) buttons again once time.

The corresponding LEDs next to the A (1) and B (2) buttons go out.

Setting the flash energy asymmetrically

Optionally, the flash energy can be set asymmetrically for Channels A and B. To set the flash energy asymmetrically for Channels A and B, proceed as follows:

- ➢ To activate Channel A, press the A button (1).
- ➢ To activate Channel B, press the B button (2).

The LEDs indicate the set maximum energy for each channel.

- ➢ To set the flash energy asymmetrically, press the B button (2) again.
- ➢ To increase the asymmetrical partitioning, press the A button (1) twice.

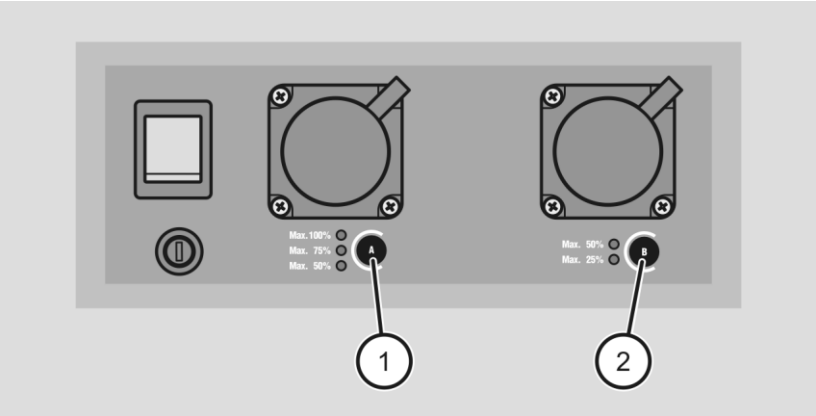

- ➢ Set the desired flash energy using the arrow buttons (1, 2, 3, 4). The values to be set can be found in the following table.

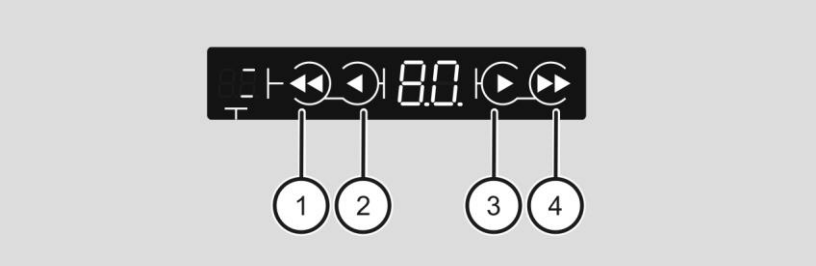

	Option	Channel A	Channel B	
Nova D 2400 Nova DL 2400	1	2400 J	---	Only Channel A
	2	1200 J	1200 J	Symmetrical
	3	1800 J	600 J	Asymmetrical
	4	1200 J	600 J	Asymmetrical
	5	---	1200 J	Only Channel B
Nova D 1200 Nova DL 1200	1	1200 J	---	Only Channel A
	2	600 J	600 J	Symmetrical
	3	900 J	300 J	Asymmetrical
	4	600 J	300 J	Asymmetrical
	5	---	600 J	Only Channel B

➢ To deactivate Channels A and B, press the A (1) and B (2) buttons again once time.

The corresponding LEDs next to the A (1) and B (2) buttons go out.

ⓘ When the flash energy is reduced, the previously accumulated energy is released internally using the integrated APD function.

Activating and deactivating the “Flash Check” function

The device flash is monitored using the “Flash Check” function. When this function is activated, the model light goes out after the flash procedure is performed and does not light up until the flash is ready to operate again.
To activate the “Flash Check” function, proceed as follows:

➢ Press the FC button.

The LED display above the FC button lights up green.

To deactivate the “Flash Check” function, proceed as follows:

➢ Press the FC button again.

The LED display above the FC button goes out.

Activating and deactivating the “Audio” function

With the “Audio” function, flash readiness after charging or after a reduction of the flash energy is indicated by an acoustic tone. To activate the “Audio” function, proceed as follows:

➢ Press the AUDIO button.

The LED display above the AUDIO button lights up green.

To deactivate the “Audio” function, proceed as follows:

➢ Press the AUDIO button again.

The LED display above the AUDIO button goes out.

Synchronizing the device with the camera

The device and the camera are synchronized using the following components:

- Sync cord (optional)
- Built-in photo cell
- Built-in radio receiver

Synchronizing the device using the cable

To connect the device to the camera, proceed as follows:

➢ Insert the jack plug of the sync cord (1) into the sync socket of the device (2).

➢ Connect the other end of the sync cord to the camera. Here, follow the user manual of the camera.

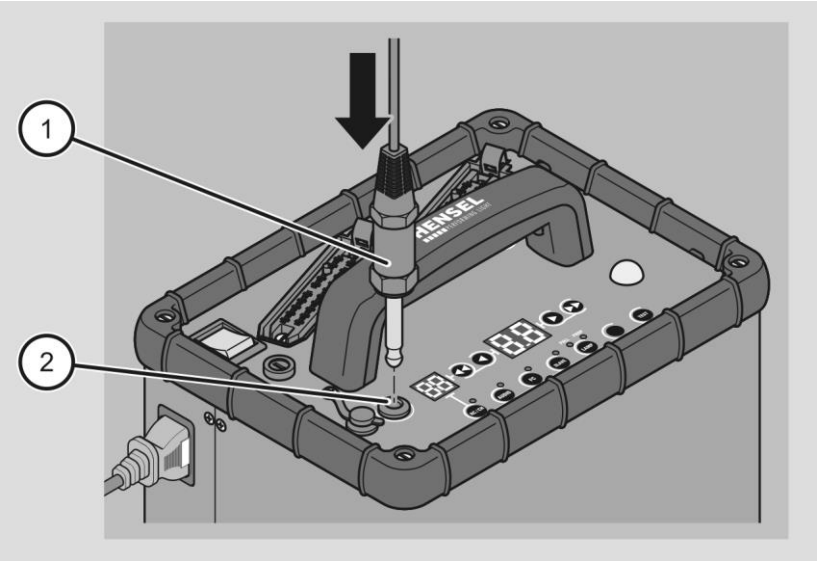

Activating and deactivating the photo cell

To activate and deactivate the photo cell, proceed as follows:

➢ Press the SLAVE button.

The LED display above the SLAVE button lights up green.

➢ Press the SLAVE button again.

The LED display above the SLAVE button goes out. The photo cell is deactivated.

ⓘ The flash is triggered through the photo cell by the striking of a flash emitted by another device. The photo cell functions as a pulse photo cell. It works only if the light output of the emitted flash is stronger than the available light. For this reason, you must ensure that excessively strong extraneous light does not affect the photo cell. In such cases, the flash must be triggered either using the sync cord or the radio remote trigger.

Radio remote trigger

The device has a built-in radio receiver “Strobe Wizard Plus” and freemask system. With the optionally available radio remote trigger, the camera and flash can be synchronized by radio. To set the radio channels, proceed as follows:

- Briefly press the RC/CH button.

The LED display illuminates as green. The last channel selected appears on the left display.

- Press the RC/CH button for about two seconds. You can now switch over between the channels using the arrow buttons (1, 2, 3, 4).
- Briefly press the RC/CH button again to deactivate the radio mode again.

The last channel selected is saved. The LED above the RCCH button goes out.

- Please also observe the instructions of the radio remote trigger.

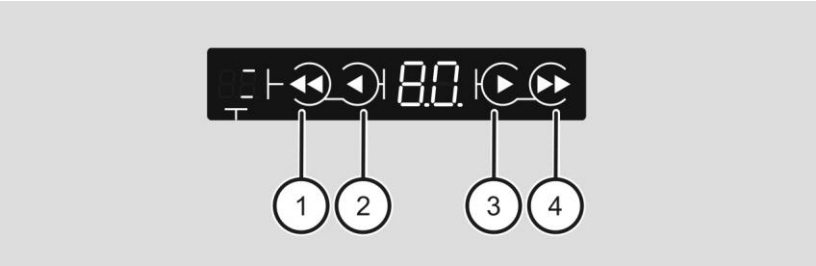

ⓘ After the C1, C2 and C3 radio channels of the HENSEL “Strobe Wizard Plus” radio remote trigger system, the F1 to F3 radio channels for the HENSEL freemask system appear.

Daily flash counter

Reading the daily flash counter

To read the daily flash counter, proceed as follows:

➢ Press the AUDIO button for one second.

The number (refer to the table below, for example) of triggered flashes is shown on the left and right displays. The number range of the daily flash counter extends up to 9999.

Left display	Right display	Result
00	21	21 flashes
01	01	101 flashes

Resetting the daily flash counter

To reset the daily flash counter, proceed as follows:

➢ Press the AUDIO button for one second.

The number of triggered flashes appears on the display.

➢ Press the SLAVE button.

The daily flash counter is reset to 0000.

Wi-Fi settings

The “Wi-Fi” menu consists of several levels. Using the arrow buttons, you can switch levels and change the value. The “Wi-Fi” menu ends automatically and assumes all changes when the last level has been exceeded or no action has been take for 3 seconds. The currently selected value always flashes.

The following figure shows an overview of the arrow buttons.

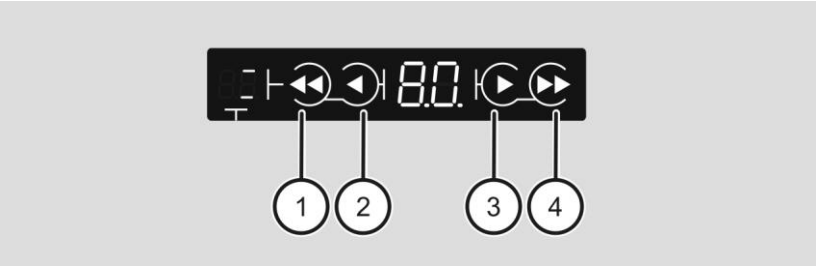

No.	Explanation
1	Go back a level
2	Decrease the selected value
3	Increase the selected value
4	Go forward a level

To open the “Wi-Fi” menu, proceed as follows:

➢ Press the arrow buttons (1, 2) at the same time.

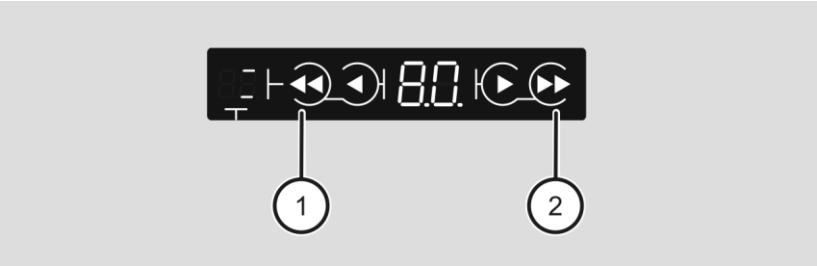

The “Wi-Fi” menu appears. On Level 1, the text “Wi-Fi” runs across the display three times.

On Level 2, you can activate and/or deactivate the “Wi-Fi” function.

➢ To activate the “Wi-Fi” function, select “On” (1).

➢ To deactivate the “Wi-Fi” function, select “--” (2).

The following is displayed on Level 3:

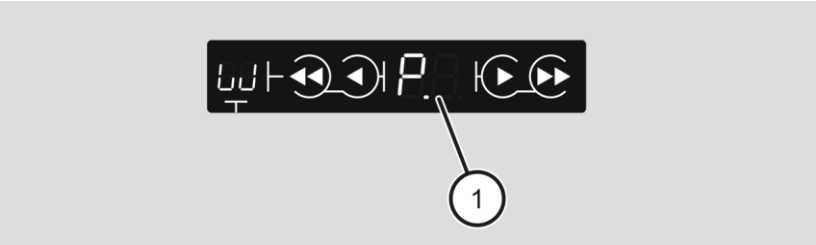

No.	Designation	Explanation
1	P	Network type “Private network” (cannot currently be amended)

On Level 4, you can select the “Team” (1) and “Wi-Fi” modes (2).

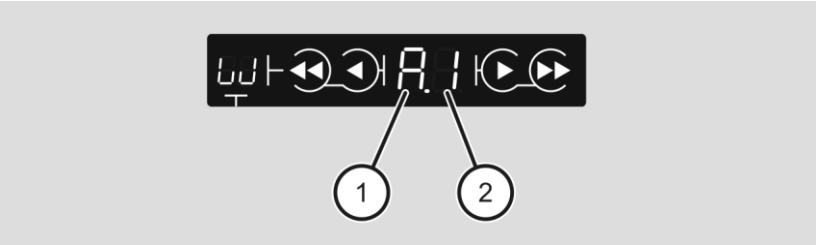

No.	Designation	Explanation
1	A–J	Designation of the team The teams are designated with the letters A-J and identified through the name of the access point. Through the team, you can also set the WLAN channel of the access point: • Teams A, D, G, J correspond with Channel 1 • Teams B, E, H correspond with Channel 6 • Teams C, F, I correspond with Channel 11
2	1–3	Wi-Fi mode Additional information can be found in the following table.

The access point is named “AP_Hensel_Team_X.” “X” stands for the selected team A through J. The access point is password-protected through WPA2PSK. In all modes, the password is: **Hensel-Visit-CTL**.

The following table shows the 4 Wi-Fi modes:

Wi-Fi mode	Explanation
3	Manual mode: In this mode, you define a device as the access point yourself. You can assign numbers of clients between 2 and 12. These numbers then also appear in the app.
2	Semi-dynamic mode: In this mode, you define one device as the access point and the remaining devices as clients. The numbers are assigned automatically.
1	Dynamic mode: In this mode, all devices configure themselves and form a network.
0	Update mode

In Wi-Fi modes 0 and 1, an access point is formed automatically. In Wi-Fi modes 2 and 3, the device that constitutes the access point must always be switched on. In Wi-Fi mode 3, the devices have a fixed number and the pertinent app allows the configuration of the devices to be saved.

On Level 5, you can configure the access point and client devices in “Wi-Fi” modes 2 and 3.

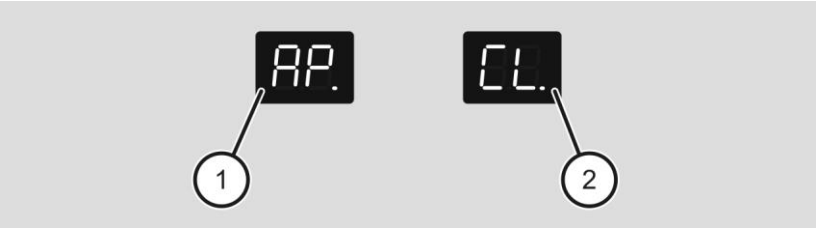

No.	Explanation
1	Here, you can choose the access point (AP).
2	Here, you can choose the client (CL).

On Level 6, you can set the device number to a value between 2 and 12 in “Wi-Fi” mode 3 in case of a configuration as client.

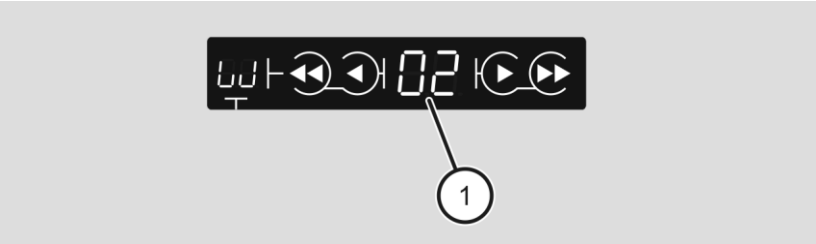

No.	Explanation
1	If “Client” (CL) is selected, you can set the number of clients (2–12).

On Level 7, the text “Con.” runs across the screen as shown. With this option, the connection status display (flashing backwards slash at the top and bottom of the first segment) is activated (“On”) or deactivated (“- -”).

The connection status display consists of 2 bars (1, 2) in the first segment of the display.

The following table shows the possible status displays:

Display	Explanation
Top display off Bottom display off	Wi-Fi OFF
Top display on Bottom display on	Wi-Fi active (the device is the access point): If a connection is established to at least one app, the top status display is constantly on; otherwise it flashes. If a connection is established to at least one client, the bottom display is constantly on; otherwise it flashes.
Top display on Bottom display off	Wi-Fi OFF (the device is a client): If a connection is established to the access point, the top display is constantly on; otherwise it flashes.
Top display on Bottom display off	Wi-Fi ON (“Update” mode): The device is the access point; the top display flashes continuously.

Error messages

In case of an error, an error number is shown on the display. In such cases, proceed as follows:

- Switch off the device.
- Wait a few seconds.
- Switch on the device again.

If the error is still indicated, proceed as follows:

- Using the following list, check to see which error is present.
- In case of serious errors, switch off the device immediately and contact our Customer Service (see page 63), specifying the error number.

Problem	Possible cause(s)	Remedy
Hot temperature error – the fan runs at maximum speed and the device does not emit a flash. Ht 50 Ht 51 Ht 52 Ht 53 Ht 54 Ht 55	Hot ambient - temperature, covered ventilation slots or defective fan.	➢ Turn off the device so that the fan can cool down the device. ➢ Make sure the ventilation slots are not covered. ➢ Make sure the fan is not defective.
Charging error Er 01	The maximum recycling time has been exceeded, e.g. because the flash tube has an afterglow.	➢ Switch off the device immediately. ➢ Send the device to Customer Service, specifying the error number.
Discharging error Er 02	The maximum period for discharging has been exceeded.	➢ Switch off the device immediately. ➢ Send the device to Customer Service, specifying the error number.

Problem	Possible cause(s)	Remedy
Temperature error 	The temperature on the capacitors is too high.	➢ Switch off the device immediately. ➢ Send the device to Customer Service, specifying the error number.
Trigger error – the device did not release a flash 	This error generally resets itself automatically and work with the device can continue.	If this error occurs frequently, proceed as follows: ➢ Make sure the trigger wire is seated properly. ➢ Replace the flash tube or send the device to Customer Service.
ZD error 		➢ Switch off the device immediately. ➢ Send the device to Customer Service, specifying the error number.
		If this error occurs frequently, proceed as follows: ➢ Send the device to Customer Service, specifying the error number.

Problem	Possible cause(s)	Remedy
Communication error Er 08		➢ Switch off the device immediately. ➢ Send the device to Customer Service, specifying the error number.

Transporting and storing the device

To transport and store the device, proceed as follows:

- Switch off the device at the main switch.
- Remove the mains cable from the device (refer to Page 28).
- Remove the flash head cable from the device (refer to Page 26).
- Do not store the device in locations exposed to heat, moisture, frost or cold.
- Cover the device.

Servicing the device

Caring for and cleaning the device

To guarantee electrical safety, the device must be cleaned regularly. To clean it, proceed as follows.

➢ Regularly clean the outside of the device with a dry cloth.

Regular inspection

National safety regulations – e.g. the Industrial Safety Act (BetrSichV) and DGUV Regulation 3 (formerly BGV A3) in Germany – demand the inspection and maintenance of electrical systems and equipment at regular intervals. The operating safety of devices and accessories must be checked regularly. An annual inspection of the devices should be carried out for the safety of the users and to retain the value of the system.

The regulations specified above (BetrSichV and DGUV Regulation 3 (formerly BGV A3)) apply to Germany; please observe the corresponding local regulations in your country.

Maintenance schedule

Maintenance	Time period
Check the operating safety of the device	Every 12 months
Check the operating safety of accessories	Every 12 months

Replacing a defective fuse

To replace the defective fuse, proceed as follows:

- Switch off the device at the main switch (4).
- Disconnect the device from the power mains.
- Open the fuse holder (2) with a small screwdriver (1) and pull it out.
- Remove the defective fuse (3).
- Insert the spare fuse from the handle (5) into the fuse holder (2).
- Close the fuse holder (2).

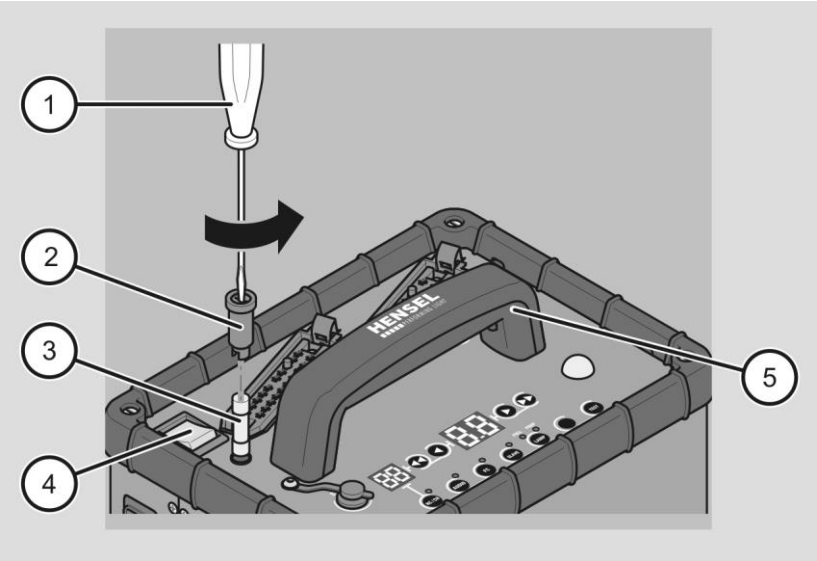

Two spare fuses are contained in the handle of the device. Remember to insert a new spare fuse as soon as possible.

Performing firmware updates

The firmware version of the device can be updated over the USB port.

➢ For more information, contact Customer Service.

Disposing of the device and packaging

In Germany

- Dispose of the packaging of the device, separated according to material. Use local options for collecting paper, cardboard and lightweight packaging.
- Dispose of the device and accessories separately from domestic waste. Information regarding collection points that accept old devices free of charge can be obtained from your municipal authority.

Outside of Germany

- Dispose of the device and packaging according to the regulations at the place of use.

EU Declaration of Conformity

Hensel-Visit GmbH & Co. KG hereby declares that device models Nova D 1200/2400 and Nova DL 1200/2400 correspond with Directive 2014/53/EU.
The complete text of the EU Declaration of Conformity is available under the following URL:
https://support.hensel.eu/index.php/eu-konformitaetserklaerungen.

Accessories

Flash heads

Designation	Article number
Nova D and Nova DL: EH Mini i EH Mini i Speed	 3635 3636
Nova D: Ring flash RF 3000P/PM-XS f-spot 3000 round plug LightStick 3000 Ws round plug	 3410 3391 379
Nova DL: Ring flash RF 3000-XS f-spot 3000 long plug LightStick 3000 Ws long plug	 3430 3390 378

The complete list of connectable flash heads can be obtained by sending a request to: info@hensel.de.

Radio remote trigger

Designation	Article number
Strobe Wizard Plus transmitter	3950
Freemask transmitter	3955

Additional accessories

Designation	Article number
Holder for hanging the device into the stand	227
Sync cord, various lengths	

Information on additional accessories can be found on our website.

Warranty provisions

In Germany

The warranty provisions can be found in our general terms and conditions for business on our website: www.hensel.de

Outside of Germany

The warranty provisions of the dealer from which you have purchased the device apply.

Limitation of liability

We are not liable for equipment or property damage, or personal injury arising from improper use of the device that is inconsistent with the information provided in the user manual. We are also not liable for consequential damages (such as production or income losses, etc.) that may be caused by a defect in or malfunction of our device.

Returning a product to Customer Service

As soon as you discover damage to the device, proceed as follows:

- Send the device in its original packaging with a precise description of the defect to the following address for repair:

HENSEL-VISIT GmbH & Co. KG
Customer Service Department
Robert-Bunsen-Str. 3
D-97076 Würzburg, Germany

Phone: +49 (0) 931-27881-0

Our Customer Service addresses within and outside of Germany can be found at:
www.hensel.de